INOVANCE

FORWARD, ALWAYS PROGRESSING

IR-S50 Series International SCARA Robot

User Guide - Manipulator

Industrial Automation | Intelligent Elevator | New Energy Vehicle | Industrial Robot | Rail Transit

Data code PS00017915A01

Preface

Introduction

Thank you for purchasing IR-S50 series SCARA robots.

IR-S50 series SCARA robots of Inovance are star products in the field of 4-axis heavy-load robots. With a maximum arm length of 1200 mm, maximum load of 50 kg, and Z-axis travel of 400 mm, the robot features good thinness, rigidity, and flexibility, and is a horizontal type multi-joint industrial robot with high efficiency, high precision, and high speed.

- High accuracy: The robot has a high level of accuracy, with a repeatability of up to ±0.05 mm.
- High stiffness: The spline is directly driven by the harmonic wave reducer, effectively improving the stiffness.
- Smooth motion: The motion control algorithm and vibration suppression algorithm are optimized to improve the compliance of robot motions, reduce the impact on the robot base and body during the motion process, and prolong the service life of the equipment.

The IR-S50 series SCARA robots are widely used in loading and unloading, precision assembly, handling, dispensing, gluing, screw tightening, labeling, material insertion, sorting in new energy, 3C and food packaging industries. The robot can be used in high-load occasions, such as handling of large parts, machine loading and unloading, machine assembly, industrial parts transfer, and other occasions.

Describes basic specifications, installation, and maintenance of IR-S50 series SCARA robots.

Note

- The drawings in the user guide are shown for illustration only and may be different from the product. Actual products may vary.
- The instructions are subject to change without notice due to product upgrade, specification modification as well as efforts to improve the accuracy and convenience of the guide.

More Data

Name	Data Code	Description
IRCB501 International Series Robot Control Cabinet User Guide	PS00017628	Describes the specifications, installation, and wiring of the IRCB501 international series control cabinet.
IRTP80 Series Teach Pendant User Guide	19012261	Describes the product information, wiring, and operation of the IRTP80 series teach pendant.
IR-S50 Series International SCARA Robot User Guide - Mechanical (this guide)	PS00017915	Describes basic specifications, installation, and maintenance of IR-S50 series SCARA robots.

Revision History

Date	Version	Description
April 2025	A01	• Updated *"1.1 Model and Nameplate" on page 11*. • Updated *"4.2 Installing the Robot Body" on page 28*. • Updated *"6.3.4 Applying Lubricating Grease" on page 49*. • Updated *"6.4.2 Procedure of Zero Point Adjustment" on page 53*.
November 2024	A00	Initial release.

Access to the Guide

This guide is not delivered with the product. You can obtain the PDF version in the following way:

- Visit www.inovance.com, go to Support > Download, search by keyword, and then download the PDF file.
- Scan the QR code on the product with your smart phone.
- Scan the QR code below to install the My Inovance app, where you can search for and download guides.

Warranty

For faults and damage incurred during normal use in the warranty period, Inovance provides free repair service. (For details of the warranty period, see the purchase order.) A maintenance fee will be charged out of the warranty period.

Even in the warranty period, a maintenance fee will be charged for repair of the following damage:

- Damage caused by operations not following the instructions in the guide
- Damage caused by fire, flood, or abnormal voltage
- Damage caused by unintended use of the product
- Damage caused by use beyond the specified scope of application of the product
- Damage or secondary damage caused by force majeure (such as natural disaster, earthquake, and lightning strike)

The maintenance fee will be charged according to our latest Price List if not otherwise agreed upon.

For details, see the Product Warranty Card.

Safety Precautions

Safety Disclaimer

- This chapter provides essential safety instructions for proper use of the product. Before using this product, read through the user guide, especially the safety instructions. Failure to observe the safety instructions may result in equipment damage, personal injuries, or even death.
- "DANGER", "WARNING", and "CAUTION" items in this guide do not indicate all safety precautions that need to be followed; instead, they just supplement the safety precautions.
- Use this product according to the designated environment requirements. Damage caused by improper use is not covered by warranty.
- Inovance shall take no responsibility for any personal injuries or property damage caused by improper usage.

Safety Levels and Definitions

DANGER indicates that failure to comply with the notice will result in severe personal injuries or even death.

WARNING indicates that failure to comply with the notice may result in severe personal injuries or even death.

CAUTION indicates that failure to comply with the notice may result in minor or moderate personal injuries or equipment damage.

Safety Precautions

- Some drawings in the guide shows the product without covers or protective guards to display more details. Remember to install the covers or protective guards as specified first, and then perform operations in accordance with the instructions.
- Operators must take mechanical precautions to protect personal safety and wear protective equipment, such as anti-smashing shoes, safety clothing, safety glasses, protective gloves, and protective sleeves.

Unpacking
WARNING • Do not install the product when you find that the product and its accessories have any damage or corrosion or they have been used. • Do not install the product when there is water inside the product or any of its parts is missing or damaged. • Do not install the product when the product name is inconsistent with that in the packing list.
CAUTION • Before unpacking, check whether the package is intact, without damage, water seepage, damp, and deformation. • Unpack the product layer by layer. Do not strike the package violently. • During unpacking, check whether the product and its accessories have any damage, corrosion, or bump on the surface. • Check the quantity of the product and its accessories and documents against the packing list.

Storage and Transportation
WARNING • Large-scale or heavy equipment must be transported by qualified professionals using specialized hoisting equipment. Failure to comply may result in personal injuries or equipment damage. • Before hoisting the equipment, ensure that components, such as the front cover and terminal blocks, are secured firmly with screws. Loosely-connected components may fall off and result in personal injury or equipment damage. • Never stand or stay below the equipment when the equipment is being hoisted by the hoisting equipment. • When hoisting the equipment with a steel rope, ensure the equipment is hoisted at a constant speed without suffering from vibration or shock. Do not turn the equipment over or let the equipment stay hanging in the air. Failure to comply may result in personal injuries or equipment damage.
CAUTION • Handle the equipment with care during transportation and mind your steps to prevent personal injuries or equipment damage. • When handling the product by hand, grab the product case tightly to avoid dropping the product and causing injuries. • Store and transport the equipment based on the storage and transportation requirements. Failure to comply may result in equipment damage. • Avoid storage and transportation in environments with water splash, rain, direct sunlight, strong electric field, strong magnetic field, and strong vibration. • Avoid storing the product for more than 3 months. When the product needs to be stored for an extended period, take more strict protection and necessary inspection. • Package the product strictly before transporting it, and use an enclosed container for long-distance transportation. • Never transport the equipment with other equipment or materials that may harm or have negative impacts on this equipment.

Installation
DANGER • Installation must be carried out by technicians who have received relevant training on electrical equipment and have sufficient electrical expertise. Non-professionals are not allowed to operate the equipment.
WARNING • Read through the guide and safety instructions before installation. • Do not install the product in places with strong electric or magnetic fields. • Before installation, check that the mechanical strength of the installation site can bear the weight of the equipment. Failure to comply may result in mechanical hazards. • Do not wear loose clothes or accessories during installation. Failure to comply may result in electric shocks. • When installing the equipment (such as the control cabinet) in a closed environment (such as a cabinet or casing), use a cooling device (such as a fan or air conditioner) to cool the environment down to the required temperature. Failure to comply may result in equipment over-temperature or fire. • Do not modify the product. • Do not loosen the fixing bolts of the product parts and components. • When installing the equipment (such as the control cabinet) in a cabinet or final assembly, make sure that the enclosure of the cabinet or final assembly provides adequate fire prevention, electrical protection, and mechanical protection conforming to relevant IEC standards and local laws and regulations. • Before installing devices with strong electromagnetic interference, such as a transformer, install a shielding device for the equipment to prevent malfunction. • Install the product on an incombustible object, such as metal, and do not touch or attach the product to combustibles. Failure to comply may result in fire accident.
CAUTION • Cover the top of the equipment (such as the control cabinet) with cloth or paper during installation to prevent unwanted objects such as metal chippings, oil, and water from falling into the equipment and causing faults. After installation, remove the cloth or paper on top of the equipment to prevent over-temperature caused by poor ventilation due to blocked ventilation holes.

Wiring
DANGER • Equipment installation, wiring, maintenance, inspection, or parts replacement must be performed by only professionals. • Before wiring, cut off all the power supplies of the equipment. Wait for at least the time designated on the equipment warning label before further operations because residual voltage still exists after power-off. After waiting for the designated time, measure the DC voltage in the main circuit to ensure the DC voltage is within the safe voltage range. Failure to comply may result in electric shocks. • Do not perform wiring, remove the equipment cover, or touch the circuit board with power ON. Failure to comply may result in electric shocks. • Check that the equipment is grounded properly. Failure to comply may result in electric shocks.
WARNING • Do not connect the input power supply to the output end of the equipment. Failure to comply may result in equipment damage or even a fire. • When connecting a drive to a motor, check that the phase sequences of the drive and motor terminals are consistent to prevent reverse motor rotation. • Cables used for wiring must meet cross sectional area and shielding requirements. The shield of the cable must be reliably grounded at one end. • Fix the terminal screws with the tightening torque specified in the user guide. Improper tightening torque may overheat or damage the connecting part, resulting in a fire. • After wiring is done, check that all cables are connected properly and no screws, washers, or exposed cables are left inside the equipment. Failure to comply may result in electric shocks or equipment damage.
CAUTION • During wiring, follow the proper electrostatic discharge (ESD) procedures and wear an anti-static wrist strap. Failure to comply may result in damage to the equipment or its internal circuits. • Use shielded twisted pairs for the control circuit. Connect the shield to the grounding terminal of the equipment for grounding purpose. Failure to comply can result in equipment malfunction.

Power-on
DANGER • Before power-on, check that the equipment is installed properly with reliable wiring and the motor can be restarted. • Check that the power supply meets equipment requirements before power-on to prevent equipment damage or fire. • After power-on, do not open the cabinet door or protective cover of the equipment, touch any terminal, or disassemble any unit or component of the equipment. Failure to comply will result in electric shocks.
WARNING • Perform a trial run after wiring and parameter setting to ensure the equipment operates safely. Failure to comply may result in physical injuries or equipment damage. • Before power-on, check that the rated voltage of the equipment is consistent with that of the power supply. Failure to comply may result in fire. • Before power-on, check that no one is near the equipment, motor, or machine. Failure to comply may result in physical injuries or even death.

Operation
DANGER • The equipment must be operated only by professionals. Failure to comply may result in death or personal injury. • Do not touch any connecting terminals or disassemble any unit or component of the equipment during operation. Failure to comply may result in electric shocks.
WARNING • Do not touch the equipment enclosure, fan, or resistor with bare hands. Failure to comply may result in personal injury. • Prevent metal or other objects from falling into the equipment during operation. Failure to comply may result in a fire or equipment damage.

Maintenance
DANGER • Equipment installation, wiring, maintenance, inspection, or parts replacement must be performed by only professionals. • Do not maintain the equipment while power is on. Failure to comply may result in electric shocks. • Before maintenance, cut off all the power supplies of the equipment and wait for at least the time designated on the equipment warning label. • When a permanent magnet motor is used, do not touch the motor terminals immediately after power-off because the motor terminals can generate induced voltage during rotation even after the equipment power supply is off. Failure to comply may result in electric shocks.
WARNING • Carry out daily and periodic inspection and maintenance on the equipment according to maintenance requirements and retain a maintenance record.

Repair
DANGER • Equipment installation, wiring, maintenance, inspection, or parts replacement must be performed by only professionals. • Do not repair the equipment while power is on. Failure to comply may result in electric shocks. • Before inspection and repair, cut off all the power supplies of the equipment and wait for at least the time designated on the equipment warning label.
WARNING • Submit the repair request according to the warranty agreement. • When the fuse is blown or the circuit breaker or earth leakage current breaker (ELCB) trips, wait for at least the time designated on the equipment warning label before power-on or further operations. Failure to comply may result in death, personal injury or equipment damage. • When the equipment is faulty or damaged, require professionals to perform troubleshooting and repair by following repair instructions and keep a repair record. • Replace quick-wear parts of the equipment in according with the replacement instructions. • Do not perform operations on damaged equipment. Failure to comply may result in death, personal injury, or severe equipment damage. • After the equipment is replaced, check the wiring and set parameters again.

Disposal
WARNING • Dispose of retired equipment in accordance with local regulations and standards. Failure to comply may result in property damage, personal injuries, or even death. • Recycle retired equipment by observing industry waste disposal standards to avoid environmental pollution.

Safety Sign

For safe equipment operation and maintenance, comply with the safety labels on the equipment. Do not damage or remove the safety labels. The following table describes the safety labels.

To ensure safe operation, comply with equipment-related safety labels. The following table describes the safety labels.

Safety Sign	Description
	• Read through the safety instructions before operating the equipment. Failure to comply may result in equipment damage, physical injuries, or even death. • Do not touch the terminals or remove the cover with power ON or within 10 minutes after power-off. Failure to comply may result in electric shocks.

Table of Contents

Preface 1
Safety Precautions 1
1 Product Information 11
1.1 Model and Nameplate 11
1.2 Components 12
1.3 Product Dimensions 13
1.4 Specifications 13
2 Preparations before Installation 15
2.1 Installation Personnel Requirements 15
2.2 Installation Environment Requirements 15
2.3 Installation Base Table Requirements 16
2.4 Installation Space Requirements 17
2.5 Preparation of Installation Tools 18
3 Unpacking, Storage, and Transportation 19
3.1 Unpacking 19
3.1.1 Precautions for Unpacking 19
3.1.2 Unpacking Procedure 19
3.2 Handling 23
3.2.1 Precautions for Handling 23
3.2.2 Preparation for Handling 23
3.2.3 Handling Procedure 24
4 Installation 28
4.1 Installation precautions 28
4.2 Installing the Robot Body 28
4.3 Installing an End Effector 29
4.4 Installing the Camera and Pneumatic Valve 30
4.5 Cable Connection 32
4.6 User Wiring and Tubing 34
5 Motion Range 36
5.1 Methods of Setting the Motion Range 36
5.2 Motion Range Setting by Angle Range 36
5.2.1 Description of Angle Ranges 36
5.2.2 Maximum Angle Range of J1 37
5.2.3 Maximum Angle Range of J2 37
5.2.4 Maximum Angle Range of J3 38

5.2.5 Maximum Angle Range of J4 39
5.3 Mechanical Limit Stops 39
5.4 Standard Motion Range 40
6 Maintenance 42
6.1 Precautions for Maintenance and Repair 42
6.2 Periodic Inspection Items 42
6.3 Part Replacement 46
6.3.1 Battery (Lithium Battery) Replacement 46
6.3.2 Indicator Replacement 47
6.3.3 Cable Replacement 48
6.3.4 Applying Lubricating Grease 49
6.4 Home Position Calibration 52
6.4.1 Overview of Zero Point Adjustment 52
6.4.2 Procedure of Zero Point Adjustment 53
6.4.3 Zero Point Position of Each Joint 58
6.4.4 Zero Point Adjustment of J2 60
7 Certification and Standard Compliance 63

1 Product Information

1.1 Model and Nameplate

IR - S 50 - 120 Z40 S - INT

① ② ③ ④ ⑤ ⑥ ⑦

① **Product family** INOVANCE Robot	④ **Arm length** 120: 1200 mm	⑦ **Version** INT: International (With functional safety)
② **Series** S: SCARA robot	⑤ **Maximum travel of Z axis (empty for models without a lead screw)** Z40: 400 mm	-
③ **Load** 50: 50 kg	⑥ **Installation environment** S: Standard	

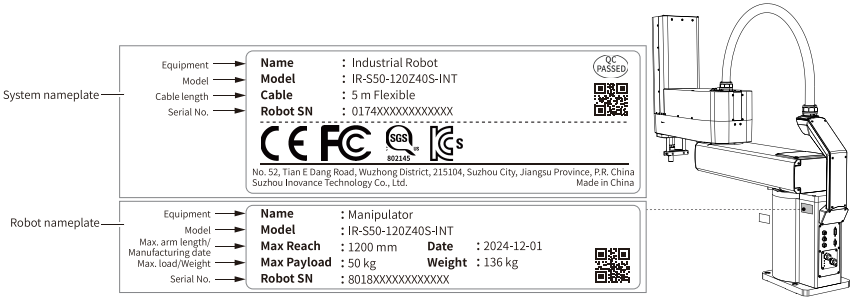

Note

- The product information in this guide is the information of standard models in a standard environment. For information about non-standard models, contact the provider.
- Do not wipe the robot hard with alcohol or benzene. Otherwise, the coated surface may lose gloss.

1.2 Components

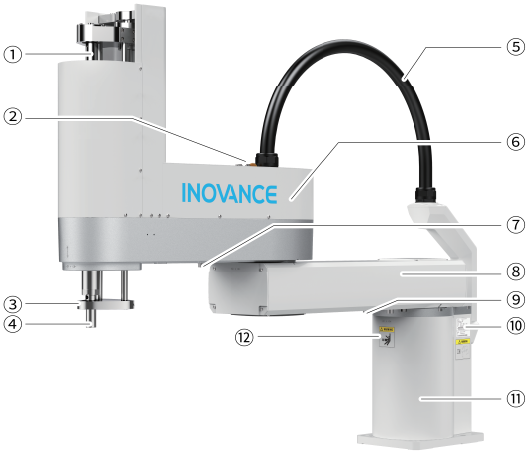

No.	Name	No.	Name
①	J3 ball screw	⑦	J2 mechanical limit stop
②	State indicator	⑧	J1 robot arm
③	Mechanical stop for limit	⑨	J1 mechanical limit stop
④	J4 spline	⑩	Nameplate
⑤	Cable unit	⑪	Base
⑥	J2 robot arm	⑫	Warning label

1.3 Product Dimensions

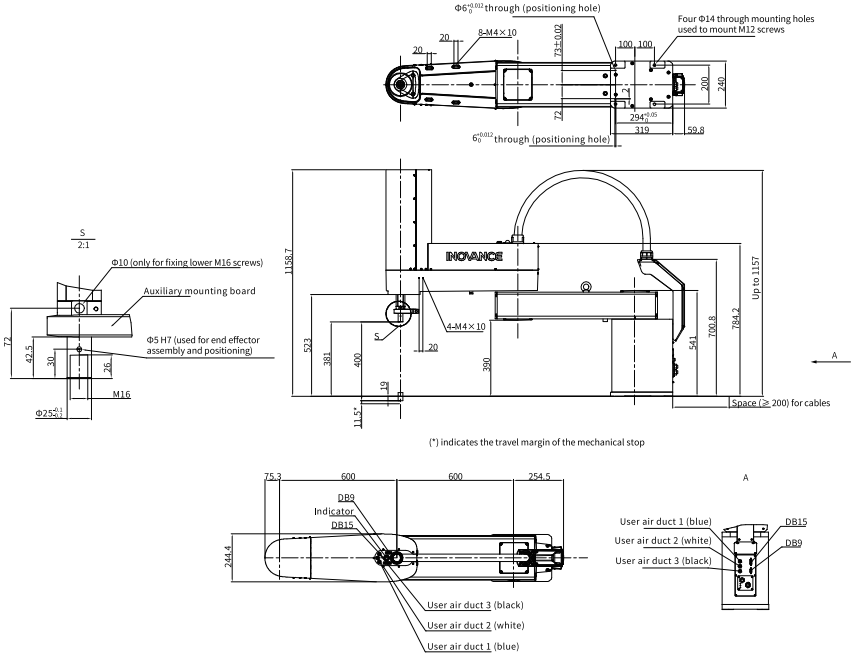

Figure 1-1 IR-S50-120Z40S-INT outline dimensions (unit: mm)

1.4 Specifications

Item		IR-S50-120Z40S-INT
Arm length	Arm 1+Arm 2	1200 mm
	Arm 1	600 mm
	Arm 2	600 mm
Maximum velocity	J1+J2	7400 mm/s
	J3	750 mm/s
	J4	600°/s
Repeat accuracy	J1+J2	±0.05 mm
	J3	±0.02 mm
	J4	±0.005°
Payload capacity	Rating	-
	Max	50 kg
Allowable load inertia for J4	Rating	-
	Max	2.45 kg·m²
Mounting hole	Mounting hole	200 mm × 200 mm (4 × Φ14 mm)

Item		IR-S50-120Z40S-INT
Body weight (excluding cables)	Body weight (excluding cables)	136 kg
Press-in force of J3	Press-in force of J3	-
User wiring	Wiring	• 15-channel signals of 30 V 0.5 A • 9-channel signals of 30 V 0.5 A
	Network port	-
User air duct	User air duct	Air duct: Φ6 mm x 3 Pressure resistance: 0.59 MPa
Ambient condition	Ambient temperature[1]	5°C to 40°C
	Relative humidity	10% RH to 80% RH
Noise level	Noise level[2]	$L_{Aeq} \leqslant 75$ dB(A)
Maximum motion range	J1	±128°
	J2	±150°
	J3	400 mm
	J4	±360°
Cycle time[3]	Cycle time[3]	0.84s
Input power (average power consumption)	Input power (average power consumption)	7 kVA (0.6 kW)
Applicable control cabinet (standard)	Applicable control cabinet (standard)	IRCB501-4ED-INT
Mounting method	Mounting method	Tabletop mounting
Certification	CE, cSGSus, FCC, KCs, and functional safety certification (supported by the "-INT" control cabinet only, requiring a functional safety expansion card)	

Note

[1] Ambient temperature: In low temperatures close to the minimum allowed temperature in the product specifications, or after a long time of unuse during holidays or nights, it is recommended to run the robot at a low speed for 10 minutes before operation.

[2] Operating conditions: 4-axis linkage, 100% speed and acceleration, 50% duty cycle; measurement position: front of the robot, 1,000 mm away from the motion range, at least 50 mm above the base mounting surface.

[3] Standard cycle time: The time required for the robot to move back and forth according to a gantry instruction (300 mm horizontal movement and 25 mm vertical movement) under a load of 5 kg.

2 Preparations before Installation

2.1 Installation Personnel Requirements

- Ensure that the installation personnel have obtained mechanics knowledge or received mechanics training in advance to understand various dangers and risks in the installation process.
- The installation personnel must be familiar with the installation requirements and relevant technical information.
- Do not allow non-professionals to perform equipment installation, wiring, maintenance, inspection, or parts replacement.

2.2 Installation Environment Requirements

General environment requirements

Set up the robot system in accordance with the following environment requirements to maximize and maintain the performance of the robot and to use it safely.

Table 2–1 Ambient conditions

Item	Requirements
Ambient temperature and humidity	• Temperature: 5°C to 40°C • Humidity: 10% RH to 80% RH, non-condensing
Storage temperature and humidity	• Temperature: –10°C to +55°C • Humidity: ⩽ 80% RH, non-condensing
Transportation temperature and humidity	• Temperature: –10°C to +55°C • Humidity: ⩽ 80% RH, non-condensing
Electrical fast transient/burst immunity	⩽ 2 kV
Static immunity	⩽ 6 kV
Environment	• Install indoors • Keep away from direct sunlight. • Keep away from dust, oil smoke, salt, and iron filings. • Keep away from flammable and corrosive liquids and gases. • Keep away from water. • Keep away from shocks and vibrations. • Keep away from sources of electrical interference.

Special environment requirements

- The surface of the robot provides certain protection. However, contact your provider and confirm in advance if the robot may come into contact with special liquid or gas during use.
- There may be condensation inside the robot if it is used in an environment with large changes in temperature and humidity. Consult your provider.
- If you want to use the robot to handle food directly, consult your provider in advance to avoid contamination of the food by the robot.

Caution

Do not wipe the robot hard with alcohol or benzene, as this may cause the gloss of the painted surface to deteriorate.

2.3 Installation Base Table Requirements

You need to make a base table to fix the robot. The shape and size of the base table vary depending on the purpose of the robot system. You may refer to the following requirements when designing a base table.

- The base table supports not only the weight of the robot, but also the dynamic forces produced by the robot when it moves at maximum acceleration. Ensure that the base table has sufficient bearing capacity by reinforcing it with materials like connecting beams.
- Consider the following torques and reaction forces produced by movements of the robot.

Type	IR-S50-120Z40S-INT
Maximum torque in the horizontal plane	1,200 N·m
Maximum horizontal reaction force	3,200 N·m
Maximum vertical reaction force	5,600 N·m

- Use M12 threaded holes on the base table to mount the robot. Use screws with a strength equivalent to Grade 10.9 or 12.9 specified in GB/T 3098.1. For the specific dimensions, see *"1.3 Product Dimensions" on page 13*.
- To dampen vibrations, use a steel plate with a thickness over 20 mm and a surface roughness below 25 μm as the robot mounting surface.
- Fix the base table externally (on the ground or a wall) in a way that prevents displacement.
- Keep the Z axis of the robot perpendicular to the horizontal plane during installation.

- When using a spirit level for base table height adjustment, use bolts with a diameter larger than M16.
- When cutting cable holes on the base table, make sure that the hole diameters are at least 60 mm.
- Reserve enough space for the robot control cabinet in the base table design. For space requirements of control cabinets, see IRCB501 International Series Robot Control Cabinet User Guide.

2.4 Installation Space Requirements

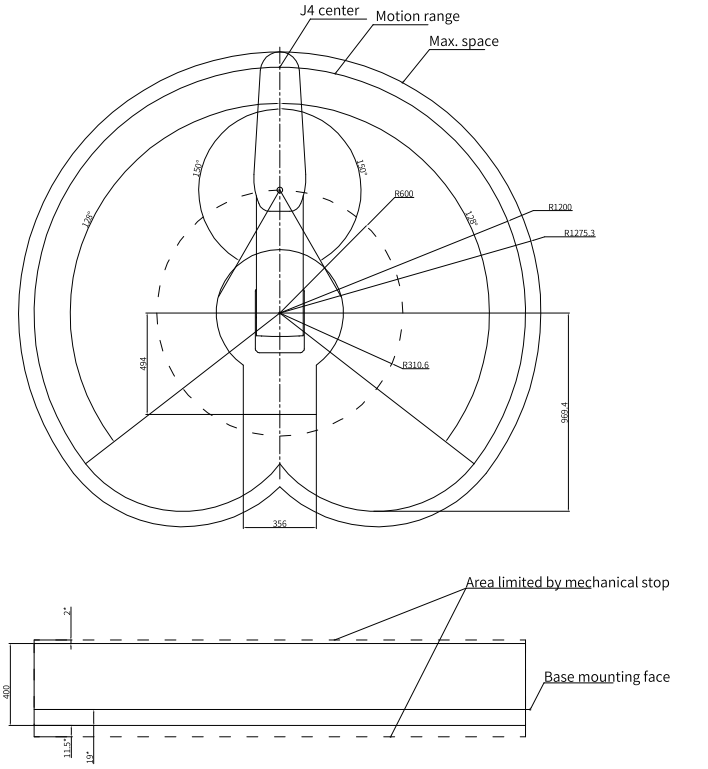

Note: Dimensions marked with * are different from the drawing scale.

Figure 2-1 Motion range of the standard model (unit: mm)

Maximum range

The "maximum range" refers to the range in which the robot arm may cause interference. When installing an end effector with a radius exceeding 74.7 mm, set the "upper arm +forearm+end effector radius" as the maximum range.

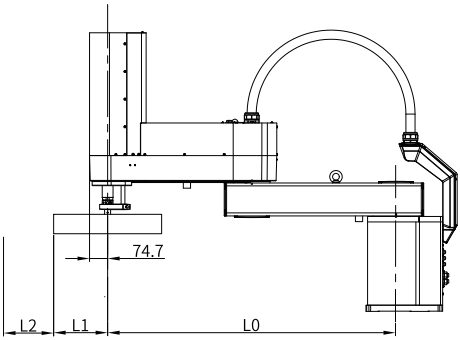

- L0: Upper arm and forearm length
- L1: Radius of the end effector
- L2: Safety margin
- The safety distance should be greater than the sum of L0, L1, and L2.

2.5 Preparation of Installation Tools

Table 2–2 Preparation of tools

Tool	Quantity (pcs)
M12 outer hexagon wrench	1
Scissors or utility knife	1
Protective gloves	1
Anti-smash shoes	1
Lifting rope	1

3 Unpacking, Storage, and Transportation

3.1 Unpacking

3.1.1 Precautions for Unpacking

Caution

Check whether the packing is intact and whether there is damage, water seepage, dampness, and deformation before unpacking.
Unpack the product layer by layer. Do not strike the package violently.
Check the surfaces of the equipment and accessories for any damage, rust, and scratches.
Check the equipment, accessories, and materials in the package against the packing list.

Warning

Do not install the equipment if you find damage, rust, or indications of use on the equipment or accessories.
Do not install the equipment if you find water seepage, component missing or damage upon unpacking.
Do not install the equipment if you find the packing list does not conform to the equipment you received.
Unpack the packing box according to the direction instructed.

3.1.2 Unpacking Procedure

1. Remove the outer carton.
   Cut the PET straps on the carton with scissors or a utility knife. Remove the carton cover and the paper corner protectors. Lift the carton vertically to remove it.

Caution

Wear gloves to prevent scratches.

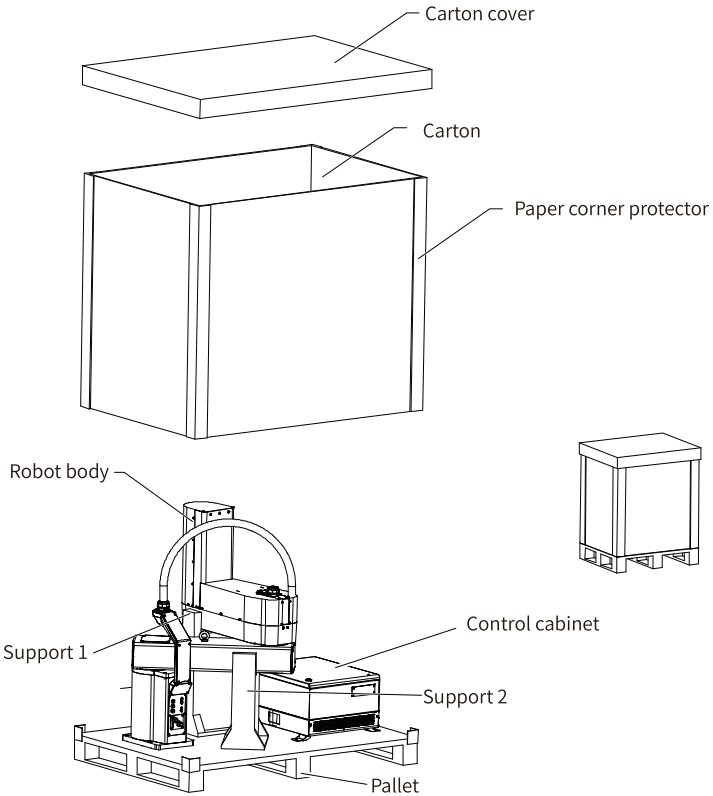

Figure 3-1 Packaging structure of IR-S50 series robots

2. Remove the robot body from the pallet.
   Remove the bolts securing the robot body on the pallet by using an M12 outer hexagon wrench.

Caution

Stabilize the robot when removing the bolts fixing the manipulator to avoid bodily injury or equipment damage caused by titling of the equipment due to unstable center of gravity.

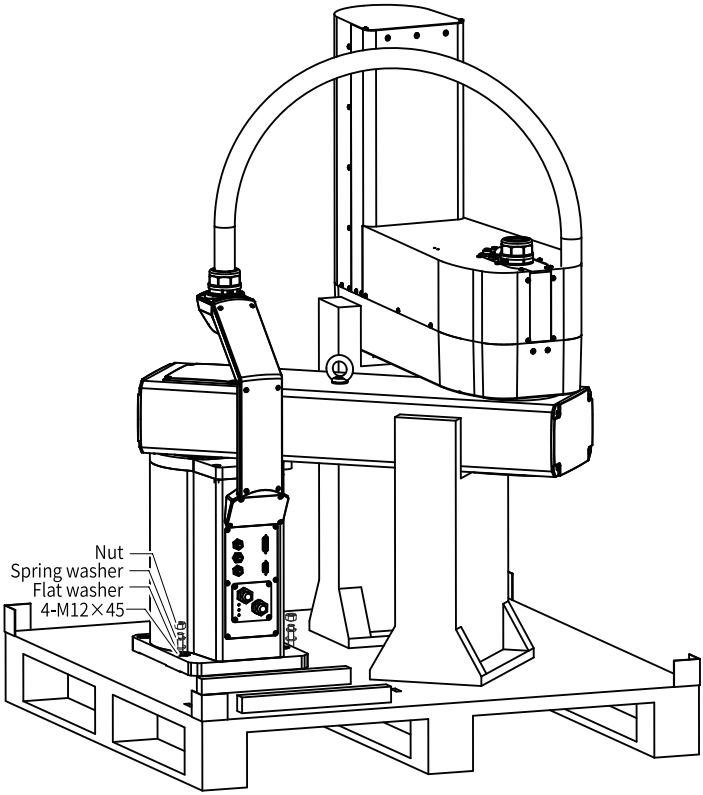

3. Take out the robot body.
   Take out the robot body by lifting it from bottom to top, and moving it horizontally. For details, see *"3.2.3 Handling Procedure" on page 24*.

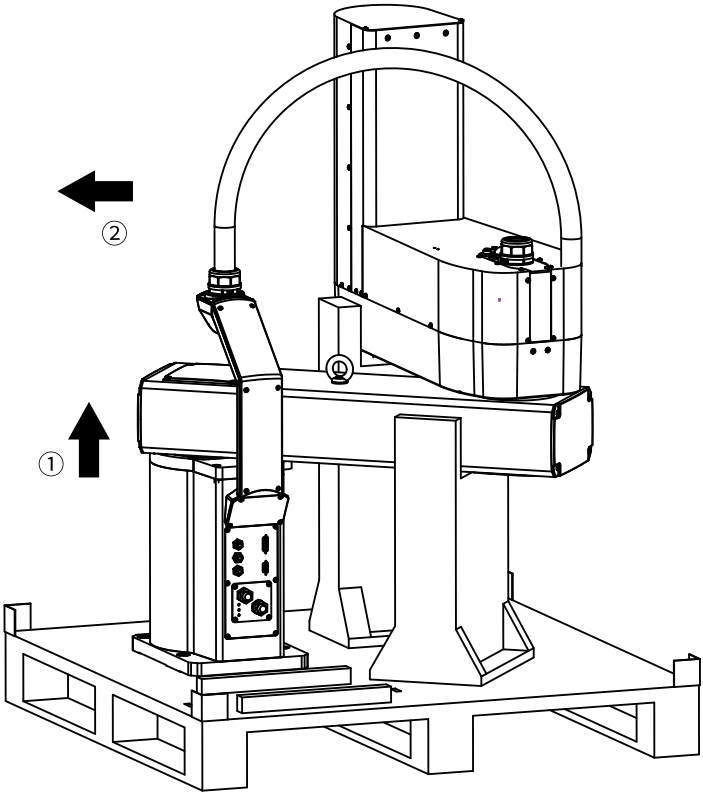

Caution

- To repack the robot, reverse the steps above.
- Please wear protective gloves to prevent scratches and work carefully to prevent damaging the machine.
- Take out the robot carefully to avoid collision.

3.2 Handling

3.2.1 Precautions for Handling

Danger

Only qualified personnel are allowed to carry out transportation including rigger operation, hoisting by crane, and forklift driving.

Note

- Transport the equipment with a crane or forklift with the original package.
- Wear personal protective equipment (PPE) during transportation with a crane or forklift. Prohibit any personnel from standing or staying around the transportation route.
- Keep the equipment balance when hoisting the equipment. Otherwise, the equipment may fall, resulting in serious injury or damage.

Caution

- Store and transport this equipment based on the storage and transportation requirements for humidity and temperature.
- Avoid transporting the equipment in environments such as water splashing, rain, direct sunlight, strong electric field, strong magnetic field, and strong vibration.
- Pack the equipment strictly before transportation. Use a sealed box for long-distance transportation.
- Never transport this equipment with other equipment or materials that may harm or have negative impacts on this equipment.
- If condensation occurs on the device during transportation or storage, remove the condensation before turning on the power.

3.2.2 Preparation for Handling

1. If the robot is newly manufactured, keep it in the same posture as it was in the factory, as shown in the following figure.

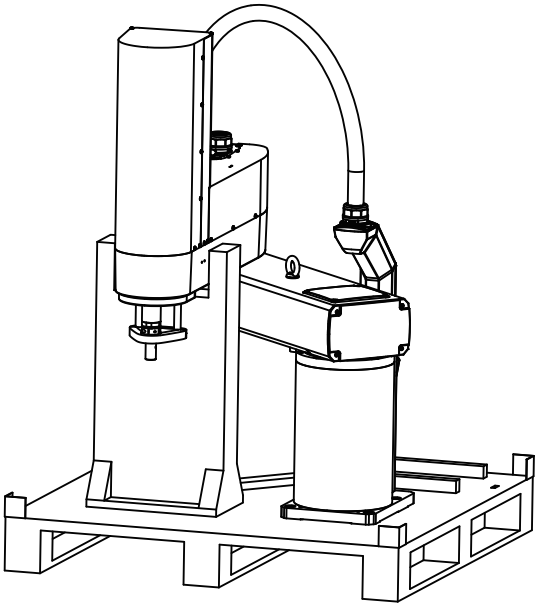

Figure 3-2 Robot posture at delivery

2. If the robot has been used and needs to be moved to another location, complete the following steps before handling:
   - Disconnect power to all devices.
   - Unplug power and signal cables connected to the control cabinet.
   - Unscrew the base mounting screws and remove the robot from the mounting base.
   - Secure the robot to the handling equipment.

3.2.3 Handling Procedure

Move the robot body onto the mounting platform by lifting.

Caution

- When the robot is delivered, its two arms are adjusted to their extreme positions and are fixed together using a support.
- Do not remove the support before the robot is secured to prevent the robot from tipping over when the center of gravity is unstable, which may cause personal injury.
- Do not pull the cables of the robot to prevent damage.
- It is recommended to use a 3 m flat sling. Make sure that the flat sling is intact with a load-bearing capacity of not less than 136 kg.
- Wear protective equipment and ensure that the lifting area is safe enough to prevent collision hazards.

1. When the robot is delivered, its forearm is secured by a support.

2. Attach one hook of the hoisting sling to the eye bolt on the robot. Ensure the hooking is reliable.

3. Secure the two arms using a strap ①.
   Pass the strap ② through the forearm of the robot.

   Attach the other anti-loosening hook of the hoisting sling to the strap ②.

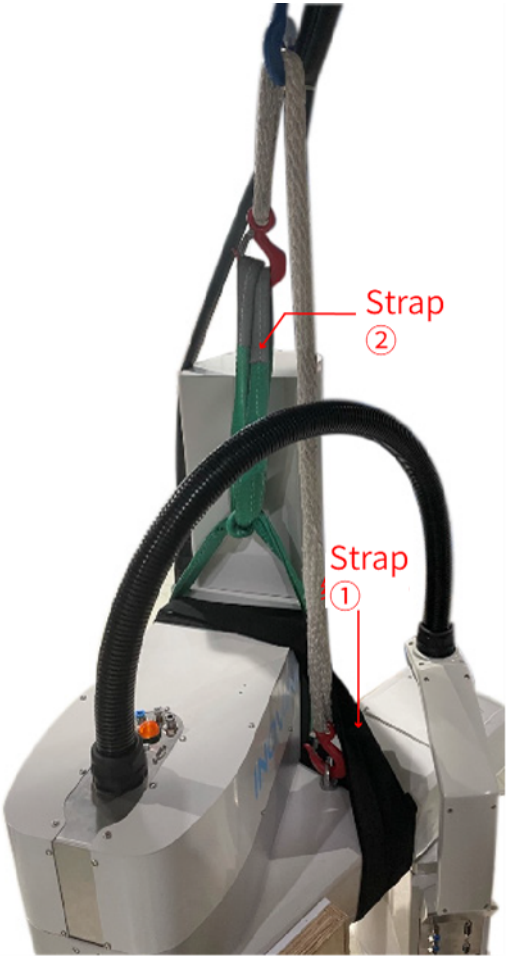

4. Two people should work together for the handling. One person should gently hold the robot body to prevent shaking and collision, while the other operates the crane to slowly lift the robot and move it to the mounting platform.

Note

- At least two people are required for handling.
- Wear safety shoes for handling.

4 Installation

4.1 Installation precautions

Danger

- Do not allow non-professionals to perform equipment installation, wiring, maintenance, inspection, or parts replacement.
- Install a safety fence for the system. Failure to comply may result in severe safety hazards.
- Reserve sufficient space between the equipment and surrounding buildings, structural parts, and devices. Failure to comply may cause serious injury or major damage.
- Fix the robot body before turning on the power or operating the system. Otherwise, the robot body may fall over and cause serious injury or major damage.

Warning

- Do not modify the equipment.
- Do not install this equipment in places with strong electric or magnetic fields.
- When removing the mounting screws of the robot body, hold the robot to prevent it from toppling over.
- For the tabletop mounting, at least two people are required for the operation.

4.2 Installing the Robot Body

Secure the base to the base table with four M12x45 screws, as shown in the following figure. Use screws with a strength equivalent to Grade 10.9 or 12.9 specified in GB/T 3098.1.

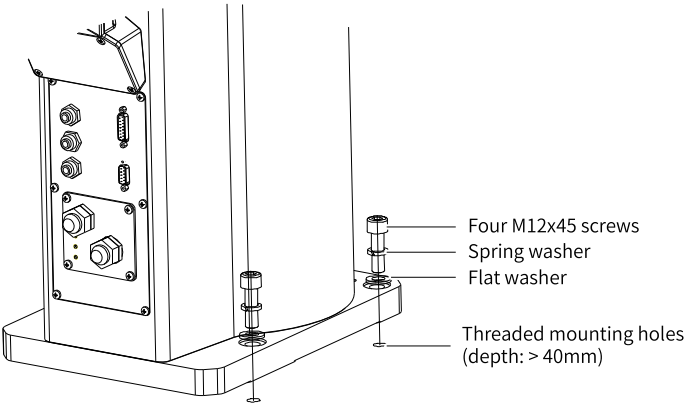

Check if the screws are securely fastened according to the following torque recommendations.

Screw Nominal Diameter (Grade 10.9 or Higher Strength)	Installation Torque
M12	140 N·m

4.3 Installing an End Effector

Customers shall prepare end effectors. Observe the following precautions when installing an end effector.

Caution

- Perform installation only when the power supply is disconnected and the workpiece is not placed. If the emergency stop switch is pressed when the power is still connected, the workpiece may be released at this time, which may cause damage to the robot system and workpiece.
- Pay attention to the interference area of the end effector during system layout design. After the end effector is installed, the end effector or workpiece may come into contact with the robot body during motion due to the outer diameter of the end effector, the size of the workpiece, or the position of the robot arm, which may cause damage to the robot system and the workpiece.

To install the end effector:

1. Lift the end effector to the lower end of the J4 spline shaft.
2. Disable the robot before installing the end effector to prevent damage to the J4 reducer. Then fix the end effector using auxiliary tooling and clamp the tooling with reverse force to prevent the end effector from rotating while assembling the M16 screws.

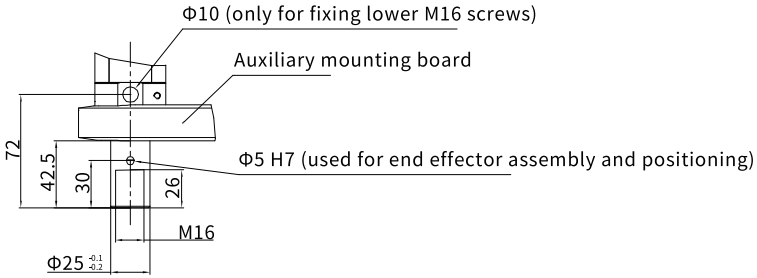

Figure 4-1 Auxiliary tooling installation position (unit: mm)

3. Install the M16 screws from the bottom of the end effector (ensure that the robot is disabled to prevent damage to the J4 reducer), and tighten the screws using a torque wrench with a torque of 150 N·m. The weight of the end effector must not exceed 50 kg, as shown in the figure below.

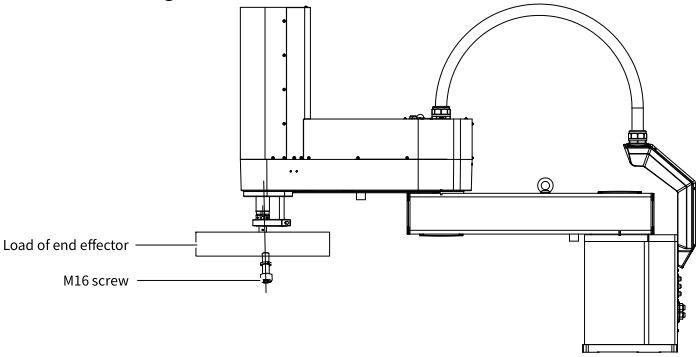

Figure 4-2 Installing an end effector

Note

Stop robot movement when installing an end effector to prevent contact between the end effector and the robot body due to the outer diameter of the end effector, workpiece size, or the robot arm position. Pay attention to the interference area of the end effector during system layout design. See the "maximum range" in *"2.4 Installation Space Requirements" on page 17*.

4.4 Installing the Camera and Pneumatic Valve

The IR-S50 series SCARA robot provides mounting holes for the camera and pneumatic valve at the bottom of arm 2, as shown in the figure below.

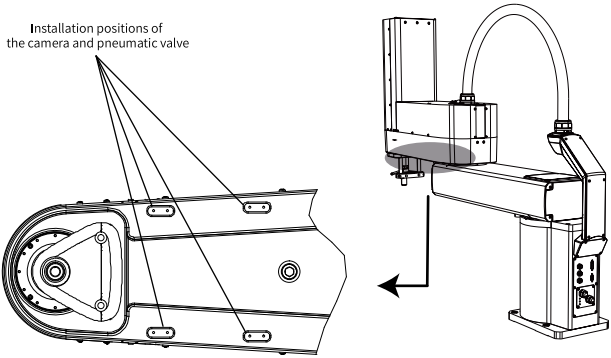

Figure 4-3 Installation positions of the camera and pneumatic valve

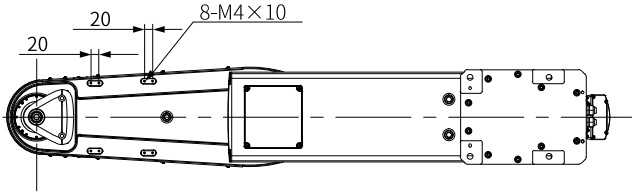

Figure 4-4 Thread dimensions for installing the camera and pneumatic valve (unit: mm)

4.5 Cable Connection

Danger

- Do not allow non-professionals to perform equipment installation, wiring, maintenance, inspection, or parts replacement.
- Cut off the power before wiring. Failure to comply may result in an electric shock or system failure.
- Before wiring, cut off all the power supplies of the equipment. Wait at least 10 minutes before further operations because residual voltage exists after power-off.
- Ensure that safety input signals, such as the emergency stop switch and safety door switch, are connected correctly. Otherwise, safety protection functions will not work properly in emergency cases, causing serious injury or damage.
- Make sure that the equipment is well grounded. Failure to comply may result in an electric shock.
- During wiring, follow the ESD procedures and wear an ESD wrist strap. Failure to comply may result in damage to internal circuits of the equipment.

Note

- Connect the cables securely. Do not lay heavy objects on the cables, or bend or drag the cables forcibly. Failure to comply will result in cable damage, wire breaking, or poor contact, causing electric shocks or system faults.
- Ensure that the diameter and shielding of the cables used meet corresponding requirements, and that the cable shield is grounded reliably at one end.
- Make the connections in correct sequence. Otherwise, the system may not work properly, which may cause safety hazards.
- After wiring, make sure that no dropped screws and exposed cables are inside the equipment.

Connect the power cord and the signal cable to the control cabinet separately.

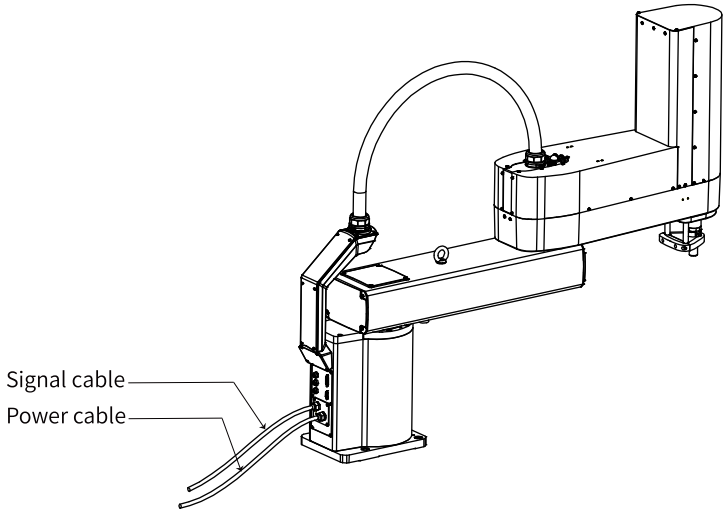

Figure 4-5 Cable connection

Table 4–1 Cable hole dimensions (IRCB501 series robot control cabinet)

Name	Power Line Connector (Cabinet Side)	Encoder Cable Connector (Cabinet Side)
Dimensions	42.5 mm x 22.8 mm x 14.77 mm (L x W x H) 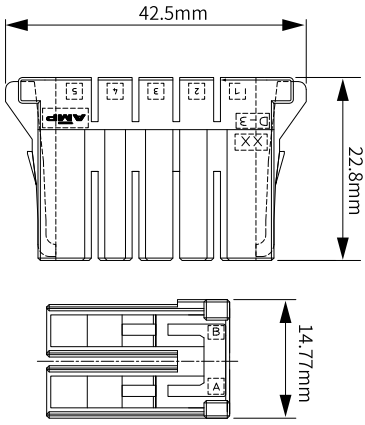	53 mm x 55 mm x 16.4 mm (L x W x H) 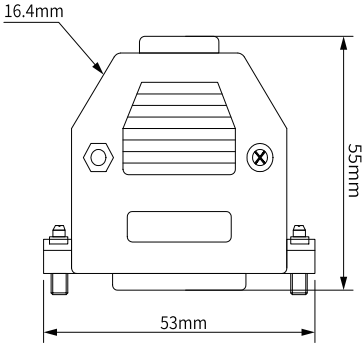

4.6 User Wiring and Tubing

Danger

Do not allow non-professionals to perform equipment installation, wiring, maintenance, inspection, or parts replacement.

Wiring (Cables)

Warning

Current higher than 0.5 A is not allowed.

Rated Voltage	Allowable Current	Number of Lines	Nominal Cross-sectional Area of Conductor	Remarks
30 VAC/VDC	0.5 A	24	24AWG	Twisted pair

Model	Code
D-sub 15Pin	15010083
	15160137
D-sub 9Pin	15010087
	15010083

Note

Use connectors with the same pin number on both ends of the cable. The robot is shipped with wiring ready for the user.

Tubing (Air Ducts)

Note

Both ends of the air tubes are equipped with quick release couplings (outer diameter of Φ6 mm).

Maximum Operating Pressure	Quantity	Specifications (Outer Diameter x Inner Diameter)
0.59 MPa (5.9 kgf/cm^2)	3	Φ6 mm x Φ4 mm

- Three Φ6 air ducts are reserved inside the robot body, with an outer diameter of 6 mm and an inner diameter of 4 mm.
- The pressure resistance level of the air ducts is no more than 0.59 MPa.
- The robot body has a total of six Φ6 straight-through air duct connectors, with three at the base and three at the forearm.
- The air duct connectors must be distinguished by color or sheet metal with silkscreen. The air duct connectors of the IR-S50 series robots are distinguished by color.

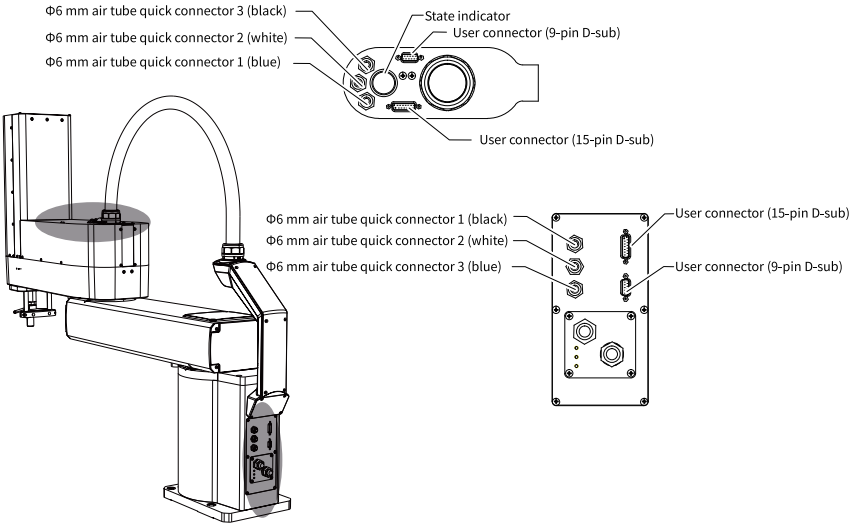

Figure 4-6 User wiring/tubing connectors

5 Motion Range

5.1 Methods of Setting the Motion Range

Note

The default motion range at delivery is the maximum motion range of the robot.

To improve layout efficiency and to take into account the maximum safe range of motion of the robot, the following motion range setting methods are provided:

- Angle range (all joints)
- Mechanical stop (for J1 to J3)

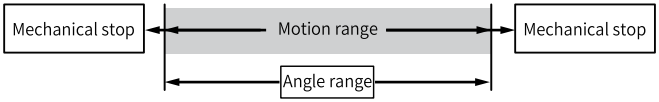

5.2 Motion Range Setting by Angle Range

5.2.1 Description of Angle Ranges

The basic unit of robot motion is degree. The robot's motion limit (motion range) is set based on the angle lower limit and angle upper limit (angle range) of each axis.

The motion angle is determined by the encoder output pulse value of the servo motor, and the angle range must be set within the mechanical stop range.

When the robot receives a motion command, it will check whether the target position of the command is within the angle range before moving. If the target position is beyond the set angle range, an error occurs and the robot does not move.

Note

You can set the angle range by choosing Set > Motion > AxisPara > AxisLimit on the teach pendant.

5.2.2 Maximum Angle Range of J1

The 0° position of J1 refers to the position where arm 1 is facing the positive direction of the X coordinate axis. Positive angle values are measured counterclockwise from the 0-pulse position, while negative angle values are measured clockwise.

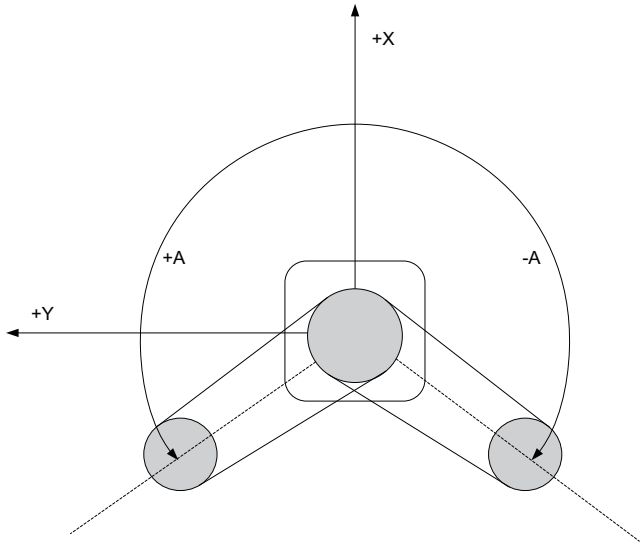

Model	Maximum Motion Range
IR-S50-120Z40S-INT	±128°

5.2.3 Maximum Angle Range of J2

The 0° position of axis J2 refers to the position where arm 2 is perpendicular to the base (regardless of the direction of arm 1). Positive angle values are measured counterclockwise from the 0° position, while negative angle values are measured clockwise.

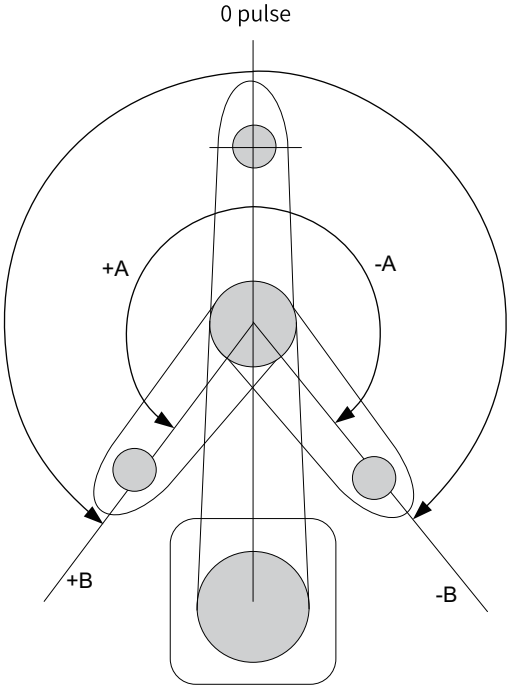

Model	Maximum Motion Range
IR-S50-120Z40S-INT	±150°

5.2.4 Maximum Angle Range of J3

The 0° position of axis J3 refers to the upper limit position of the axis. When axis J3 descends from the 0° position, its angle value becomes negative.

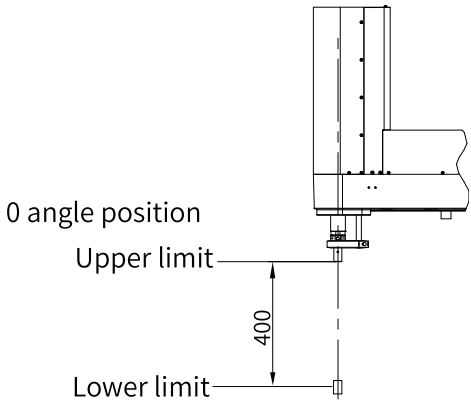

Model	J3 Travel
IR-S50-120Z40S-INT	400 mm

5.2.5 Maximum Angle Range of J4

The 0° position of axis J4 refers to the position where the plane at the top of the axis is facing toward the top of arm 2 (regardless of the direction of arm 2). Positive angle values are measured counterclockwise from the 0° position, while negative angle values are measured clockwise.

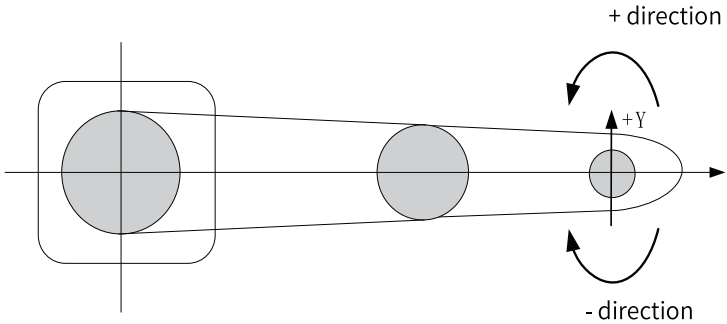

Model	Maximum Motion Range
IR-S50-120Z40S-INT	±360°

5.3 Mechanical Limit Stops

The IR-S50 series robot has mechanical stops at J1, J2, and J3 and all these mechanical stops are not adjustable. The set motion ranges for mechanical limit stops at J1 and J2 are

extreme motion ranges. The up and down motion range for the mechanical limit stop at J3 is set by the internal program.

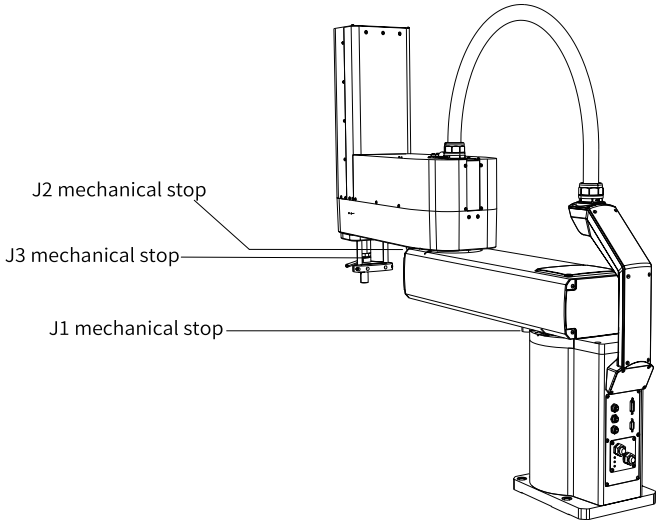

5.4 Standard Motion Range

Name	Description
Motion Range	The range for motion at the standard (maximum) specifications. When each axis is enabled, the lower center of axis J4 moves within the motion range.
Range before the mechanical stop	The range in which the lower center of J4 moves when each axis is enabled.
Mechanical stop	The stop used to mechanically set an absolute motion range beyond which motion is not allowed.
Maximum range	The range in which the robot arm may cause interference. When installing an end effector with a radius exceeding 74.7 mm, set the "upper arm+forearm+end effector radius" as the maximum range.

The following figure shows the motion range.

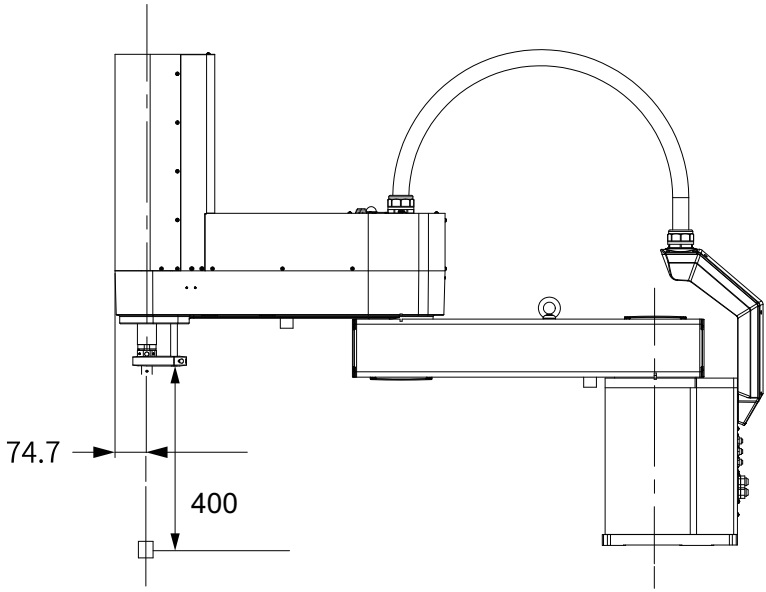

Figure 5-1 Motion range of an end effector (unit: mm)

6 Maintenance

6.1 Precautions for Maintenance and Repair

Before maintenance, read this guide to fully understand the methods of safe maintenance.

Danger

- Equipment installation, wiring, maintenance, inspection, or parts replacement must be performed only by professionals.
- Do not maintain the equipment after power-on. Failure to comply will result in an electric shock.
- Do not remove the parts not mentioned in this document. Do not maintain any part with a method different from that described in this document.
- Check the motion of the robot after parts replacement outside the safety fence. Failure to comply may cause severe safety issues due to abnormal movement of the robot.
- Make sure that the emergency stop switch and safety door switch work properly before operation. Otherwise, safety protection function will not work properly in emergency cases, causing serious injury or damage.

Warning

- Require for repair services according to the product warranty agreement.
- Perform daily and periodic inspection and maintenance for the equipment according to maintenance requirements and keep a maintenance record.
- When the equipment is faulty or damaged, require professionals to perform troubleshooting and repair by following repair instructions and keep a repair record.
- Replace quick-wear parts of the equipment according to the replacement guide.
- Prevent foreign objects from entering the equipment and terminals during maintenance.
- Open the equipment cover only when repair and maintenance.
- After the equipment is replaced, perform wiring inspection and parameter settings again.

6.2 Periodic Inspection Items

Perform periodic inspection on items that are difficult to check during operation. Clear the dust especially metal powders on the surface of the equipment to prevent the dust from entering the equipment. Clear the greasy dirt from the cooling fan.

- Inspection during power-off (not operating)

Item	Position	Daily	Monthly	Quarterly	Semi-annual	Annual	Maintenance Personnel		
							Professionals	Qualified Personnel	Manufacturer
Check whether the screws are loose. If yes, tighten the screws.	End effector mounting screws	✓	✓	✓	✓	✓	✓	✓	✓
	Robot mounting screws	✓	✓	✓	✓	✓	✓	✓	✓
	Screws around each axis	✓	✓	✓	✓	✓	✓	✓	✓
	Screws for the motor and reducer	-	-	-	-	✓	-	✓	✓
Check whether the connectors are loose. If yes, insert/tighten the connectors.	External part of the robot body (such as the connector board)	✓	✓	✓	✓	✓	✓	✓	✓
	Robot cable unit	-	✓	✓	✓	✓	✓	✓	✓
Visually inspect for any external defects and clear attached dust.	Robot body	✓	✓	✓	✓	✓	✓	✓	✓
	External cables	-	✓	✓	✓	✓	✓	✓	✓

Item	Position	Daily	Monthly	Quarterly	Semi-annual	Annual	Maintenance Personnel		
							Professionals	Qualified Personnel	Manufacturer
Check for deformation and position offset. Repair or place it properly if necessary.	Safe guard	✓	✓	✓	✓	✓	✓	✓	✓
Check tension of timing belt. Tighten it if necessary.	Inside arm 2	-	-	-	✓	✓	✓	✓	✓
Check if the lubricating grease is sufficient for lubrication, and add an appropriate amount of lubricating grease as needed.	Ball screw	-	-	-	✓	✓	✓	✓	✓
	Spline	-	-	-	✓	✓	✓	✓	✓
	Polished rod lubrication inspection place	-	-	-	✓	✓	✓	✓	✓

- Inspection during power-on (not operating)

Item	Position	Daily	Monthly	Quarterly	Semi-annual	Annual	Maintenance Personnel		
							Professionals	Qualified Personnel	Manufacturer
Shake the cable gently by hand to check for wire breakage.	External cables (including cable units of the robot)	-	-	-	✓	✓	-	✓	✓
Press each arm by hand in the enabled state to check whether the arms shake.	Each axis	-	-	-	-	✓	-	✓	✓

- Inspection during power-on (operating)

Item	Position	Daily	Monthly	Quarterly	Semi-annual	Annual	Maintenance Personnel		
							Professionals	Qualified Personnel	Manufacturer
Confirm the motion range.	Each axis	-	-	-	-	✓	-	✓	✓
Check for abnormal noises or vibration.	Robot body	✓	✓	✓	✓	✓	✓	✓	✓
Measure the accuracy repeatedly by gauge.	Robot body	-	-	-	-	✓	-	✓	✓

6.3 Part Replacement

6.3.1 Battery (Lithium Battery) Replacement

Note

- Do not perform equipment maintenance or servicing while power is on. Failure to comply may result in an electric shock.
- When disposing of waste batteries, consult a professional disposal company or follow relevant local regulations.
- Use lithium batteries correctly. Incorrect usage may result in overheating, leakage, explosion, or fire, causing severe risks to personal and property safety.
  - Charging lithium batteries is prohibited.
  - Applying pressure to deform lithium batteries is prohibited.
  - Disassembling lithium batteries is prohibited.
  - Short-circuiting or incorrect connections to lithium batteries are prohibited.
  - Heating lithium batteries is prohibited.
  - Disposing of lithium batteries in fire is prohibited.
  - Welding battery terminals is prohibited.
  - Forcing discharge of lithium batteries is prohibited.

To prevent loss of zero points, after removing the back cover of the robot body, first insert a new battery into the white 2P connector. Secure the new battery in the wiring compartment, and then remove the used battery. The replacement steps are as follows:

1. Remove the screws of the base extension arm cover and then remove the base tail assembly cover.

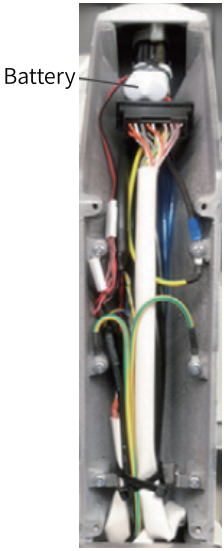

Figure 6-1 Battery position

2. Cut the zip tie securing the battery to the battery board.
3. Tie the new battery onto the battery board with a zip tie.
4. Fix the battery board to the cable bracket.
5. Connect the terminal of the new battery to the empty white 2P connector.
6. Remove the used battery.

Note

Failure to comply with the procedure described above may cause loss of zero points. For details, see *"6.4.1 Overview of Zero Point Adjustment" on page 52*.

6.3.2 Indicator Replacement

To replace the indicator:

1. Remove the arm top cover, as shown in the following figure.

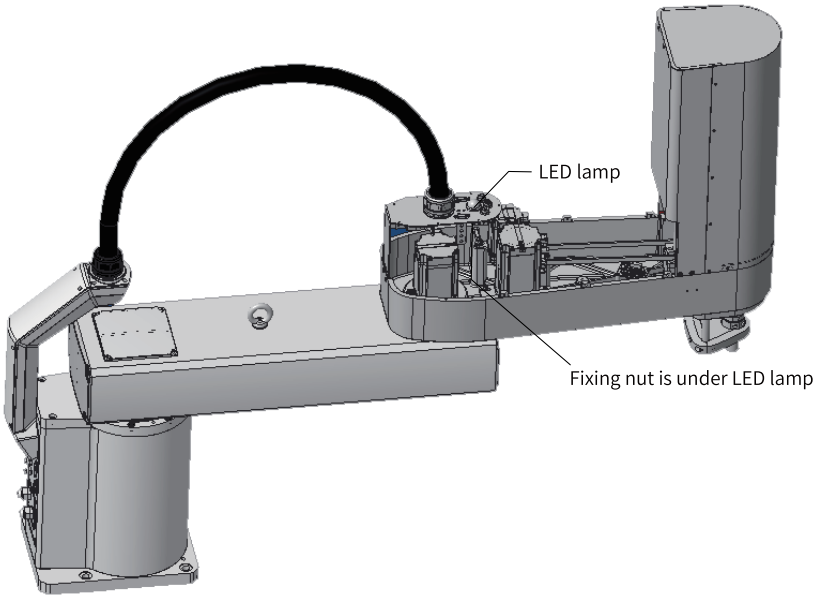

Figure 6-2 Indicator position

2. Remove the connector connected to the indicator.
3. Rotate the retaining nut counterclockwise to remove it.
4. Remove the indicator from the sheet metal.
5. Connect the removed cables to the new indicator, fix the new indicator onto the mounting frame, and connect it to the connector.

6.3.3 Cable Replacement

1. Loosen the screws fixing the cable plate on the base and then remove the cable plate.
2. Replace the damaged cable.

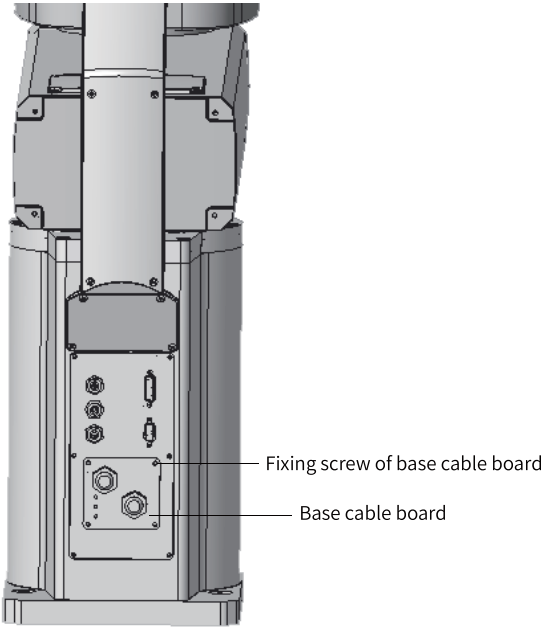

Figure 6-3 Cable plate on the base

Caution

- Do not pull the cable board forcibly. Failure to comply will result in cable damage, wire breaking, or poor contact, causing electric shock or system fault.
- After removing the cable board, ensure that the cables are correctly connected during cable maintenance.

6.3.4 Applying Lubricating Grease

Note

- Only apply the original lubricating grease to the reducer.
- Normally, the reducer does not need to be greased. However, under the extreme conditions (duty cycle, speed, and load), the grease needs to be replaced regularly.
- Replacing grease by non-professional personnel is not allowed. If maintenance is needed, contact Inovance after-sales maintenance personnel.

Before maintenance, it is necessary to clarify the parts configuration of the robot body. The type of lubricating grease used for reducers or ball screws varies from supplier to supplier. The specific types of lubricating greases used and their codes are listed in the table below.

Table 6–1 Lubricating Greases

Component	Lubricating Grease Type	Lubricating Grease Code
RV reducer	Reducer lubricating grease	24060215
Lead screw	Ball screw lubricating grease	24060125

Due to the aging cycle of lubricating grease used for the RV reducer of heavy-load SCARA robots, it is necessary to regularly replace the lubricating grease to ensure the lubrication performance cycle of the reducer. The lubricating grease replacement cycle of the RV reducer is closely related to the actual working conditions and environment. The lubricating grease replacement cycles for SCARA robot RV joints are as follows.

Application Scenarios	Lubricating Grease Replacement Cycle
Reducer enclosure temperature lower than 40°C	12,000 h
Reducer enclosure temperature between 40°C and 55°C	50% of L10 design life
Continuous long-term high-beat working conditions (design life less than 6,000 h)	50% of L10 design life

It is recommended to use an industrial infrared thermometer to measure the temperature rise on the reducer enclosure. The temperature measurement point is as follows.

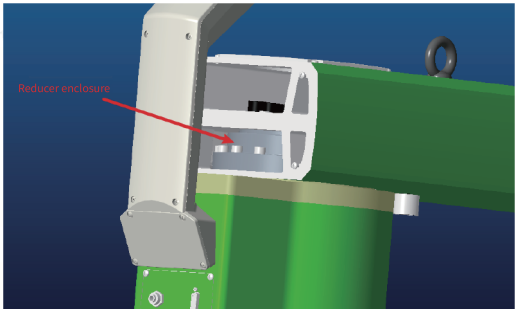

Note

- When the output rotation angle is below 10°, consult Inovance.
- [1]: It is 12 only for RV-6E.

The following table lists the S50 series robot joints that need to be regularly lubricated and the lubricating volume.

Lubricating Joint	Lubricating Volume	Lubricating Grease Code
RV reducer of J1	440 mL (382 g)	24060215
RV reducer of J2	160 mL (139 g)	

Note

RV reducer lubricant replacement and refilling precautions

If the lubrication operation is incorrectly performed, the internal pressure of the lubrication chamber may suddenly increase, which may damage the seal and cause lubricant leakage and abnormal operation. Therefore, adhere to the following when performing lubrication operations:

- Before lubrication, open the oil drain port (remove the plug of the oil drain port).
- Provide lubricating oil slowly at a speed of 36 g/10s (40 mL/10s) or less gently. It is necessary to use a lubricating oil gun that can clearly add oil volume. In case of no oil gun, confirm the amount of lubricating oil by measuring the lubricating oil weight before and after oiling.
- If the oil supply is insufficient, use a precision regulator for gas supply to squeeze out the air in the chamber and then supply oil. Control the air pressure at 0.03 MPa or less by using a regulator.
- Only use the specified type of lubricating oil. If other types of lubricating oil are used, it may damage the reducer or cause other problems.
- After oiling, release the residual pressure in the lubricating oil chamber before installing the hexagon socket screw plugs. When installing hexagon socket screw plugs, it is necessary to install sealing gaskets to prevent the lubricating oil from leaking at the oil supply port and oil drain port.
- Check whether the exhaust valve is blocked by grease. If the exhaust valve contains grease, replace it with a new one.
- To prevent accidents caused by slipping, completely clean up excess lubricating oil on the ground and on the robot.

After the robot body is running, it is necessary to regularly replace the ball screw lubricating grease to ensure that the ball screw and spline of the robot body can be well lubricated. The following table lists the recommended replacement part and cycle.

Table 6–2 Recommended lubricating grease replacement cycle for the ball screw of the robot body

Part	Replacement Cycle
J3 rotary screw+plain shaft	3 months or running for 100 km
J4 rotary spline	3 months or running for 100 km

Note

- Before maintenance, prepare the necessary tools and fixtures, lubricant, screws and other auxiliary materials for assembly and disassembly in advance.
- During maintenance, if you encounter special problems, you can take photos for record and contact our R&D personnel and production process personnel for help.
- For special operating conditions, such as those with fast operating rhythms, recording and regular lubrication are required. Consult our R&D personnel for specific maintenance cycles.

If the lubricant gets into your eyes, mouth, or on your skin, follow the instructions below:

- Before maintenance, prepare the necessary tools and fixtures, lubricant, screws and other auxiliary materials for assembly and disassembly in advance.
- During maintenance, if you encounter special problems, you can take photos for record and contact our R&D personnel and production process personnel for help.
- For special operating conditions, such as those with fast operating rhythms, recording and regular lubrication are required. Consult our R&D personnel for specific maintenance cycles.

6.4 Home Position Calibration

6.4.1 Overview of Zero Point Adjustment

The zero point is the reference point and base point for the robot. When robot parts (such as the motor, reducer, synchronous belt, and cables) are replaced, the zero point stored on the motor side may deviate from that stored on the controller side, which leads to failure of correct positioning. Therefore, after the parts are replaced, zero point adjustment is required.

Note

After zero point adjustment, the absolute accuracy of the robot may deviate from the default absolute accuracy at delivery.

- Install a safety fence for the system to prevent people from entering the motion range of the system. Failure to comply may result in severe safety issues.
- Before operation, ensure that there is no person within the safety fence. Do not enter the motion range during system running. Failure to comply may result in severe safety issues.
- Operating the robot system in teach mode can ensure the safety of the operator to a certain extent, although the motion is limited (low speed and low power). However, severe safety issues may also occur when the robot performs unexpected actions.

6.4.2 Procedure of Zero Point Adjustment

Both the PC-based teach pendant and the hand-held teach pendant provide an operation interface for zero point adjustment. The following is an explanation using the PC-based teach pendant, with similar operations for the hand-held teach pendant.

Due to the strong correlation between the 4-axis robot's operation point coordinate and the accuracy of J2 axis, it is necessary to complete zero point adjustment of J2 axis before calculating the robot coordinates. The teach pendant provides a right/left wrist wizard. Follow the wizard to adjust the zero point.

When performing zero point adjustment using the teach pendant, adjust J4 and J3 at the same time.

1. Select a role and log in to the system.
   a. On the main screen of the teach pendant, click the "User Settings" shortcut key to open the "User Settings" screen.
   b. Enter the password in the password input box and click "Log In".

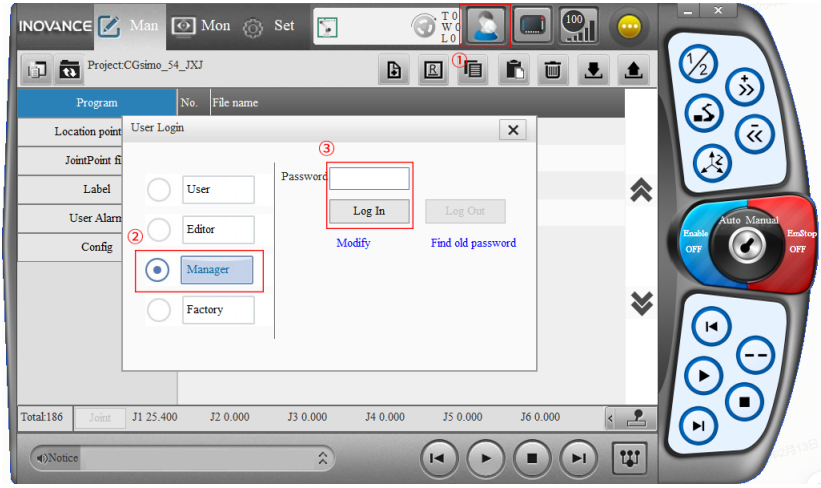

Figure 6-4 Screen of IRTP80 series tech pendant

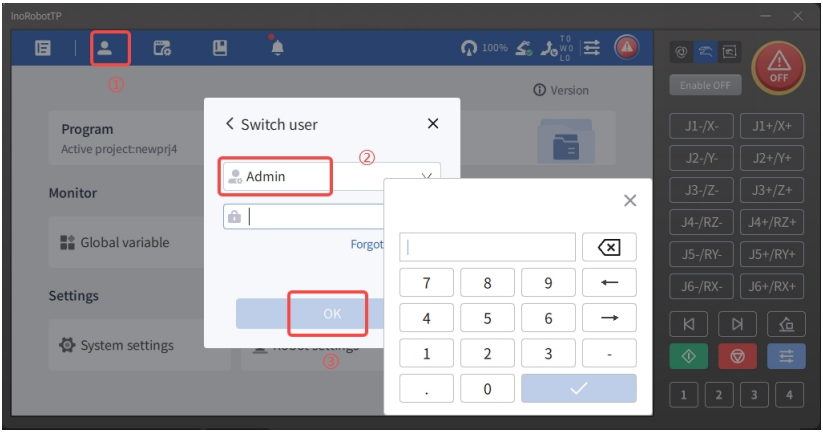

Figure 6-5 Screen of IRTP200 series tech pendant

2. Switch to the ZeroPoint setting screen.
   On the main screen of the teach pendant, choose "Set" > "BasePos" > "ZeroPoint" to open the "ZeroPoint" screen.

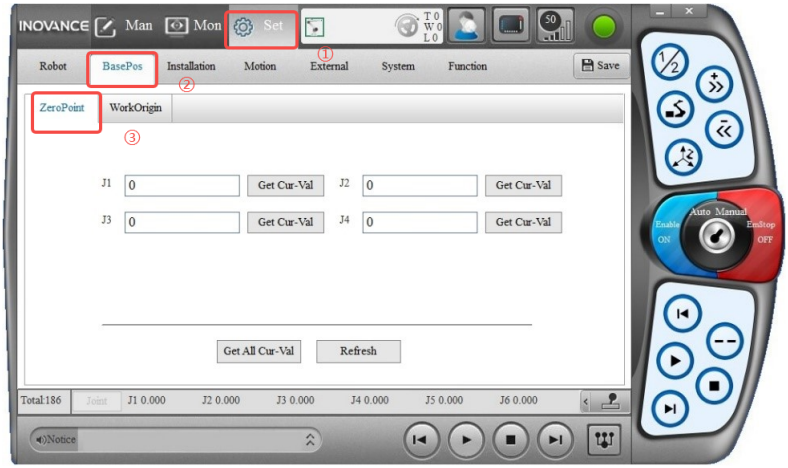

Figure 6-6 Screen of IRTP80 series tech pendant

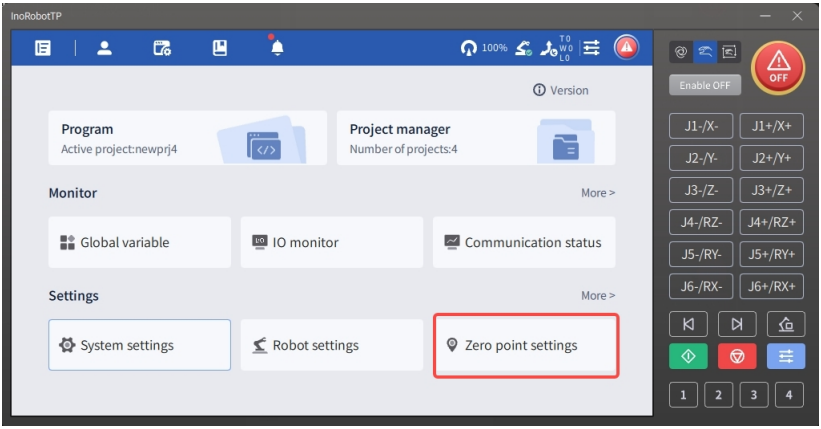

Figure 6-7 Screen of IRTP200 series tech pendant

3. Move each axis of the robot to the corresponding zero point.
   a. Move the robot axes to their respective zero points on the hand-held or PC-based teach pendant. For details, see Teach Pendant User Guide.
   b. Also, you can manually push a robot joint to the zero point when the motor is disabled.

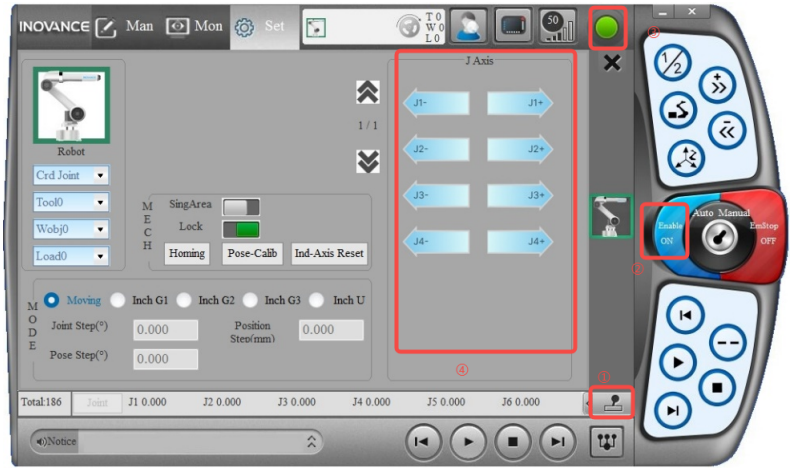

Figure 6-8 Screen of IRTP80 series tech pendant

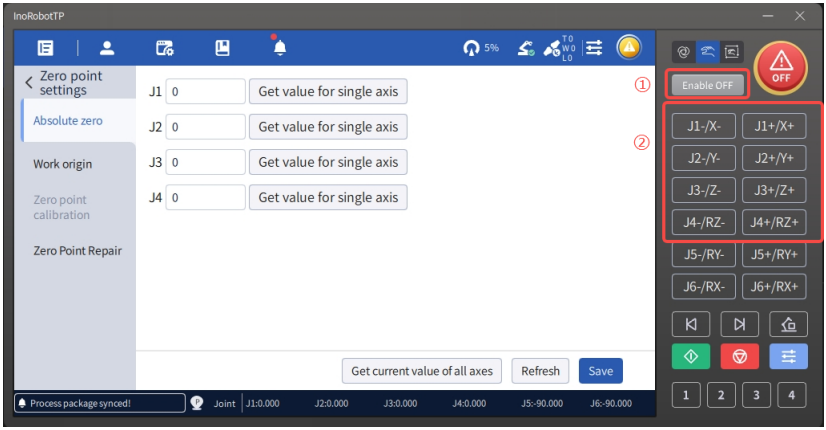

Figure 6-9 Screen of IRTP200 series tech pendant

4. Switch to the emergency stop state.
   a. Click the virtual emergency stop button on the PC-based teach pendant, or press the red "EmStop" button on the hand-held teach pendant.
   b. The status indicator in the upper right corner of the PC-based teach pendant (or the display of the hand-held teach pendant) indicates the emergency stop state (red).

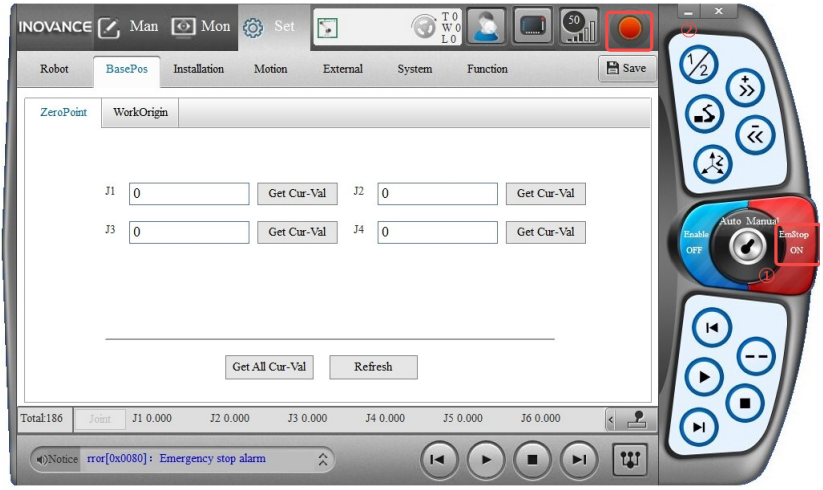

Figure 6-10 Screen of IRTP80 series tech pendant

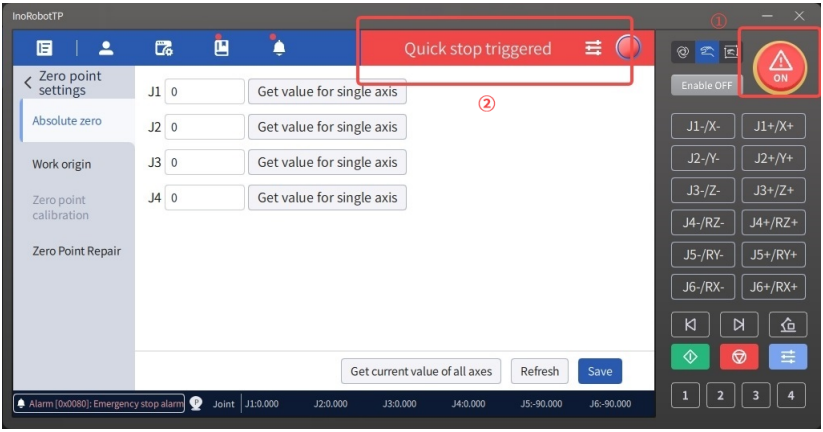

Figure 6-11 Screen of IRTP200 series tech pendant

5. Obtain and save the zero point information.
   a. Click the "Get Cur" button when the robot moves to the zero point position to obtain the encoder pulses at the zero point position.
   b. Click "Save" to complete zero point adjustment.

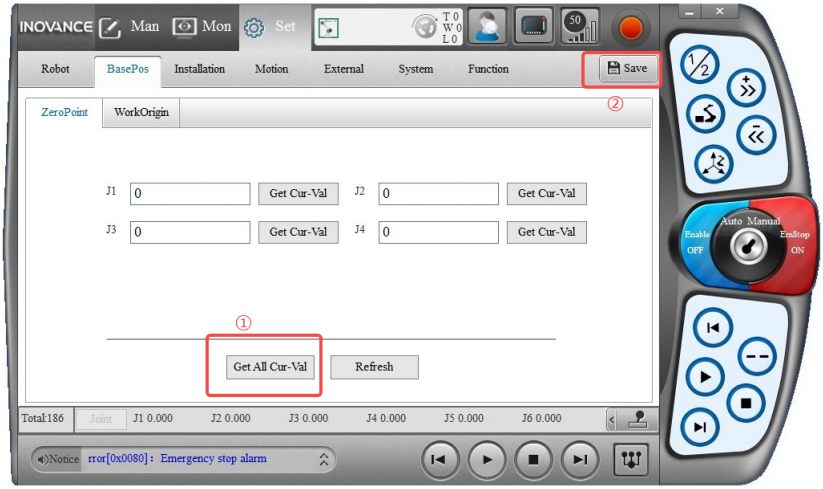

Figure 6-12 Screen of IRTP80 series tech pendant

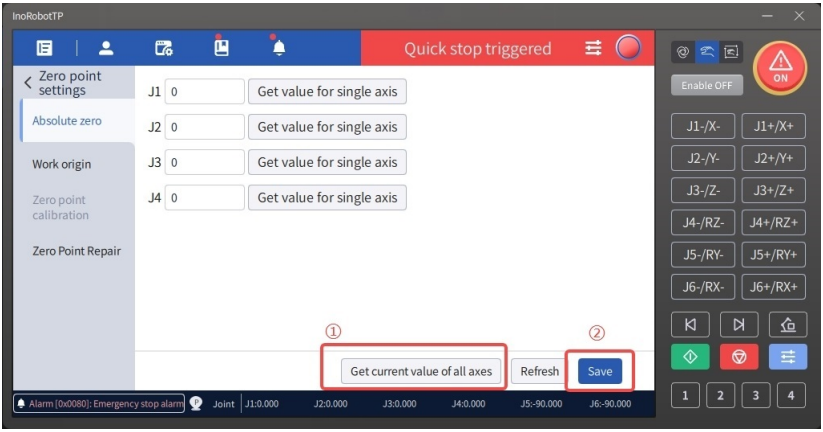

Figure 6-13 Screen of IRTP200 series tech pendant

6.4.3 Zero Point Position of Each Joint

1. The zero point of axis J1: is the position that overlaps with the X axis of the robot coordinate system.

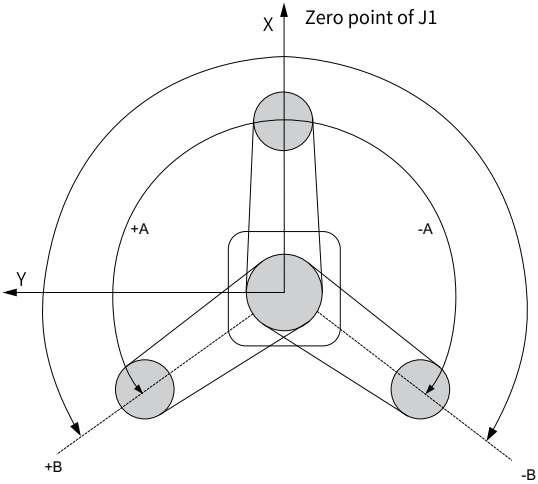

Figure 6-14 Zero point of axis J1

2. The zero point of axis J2 is the position that is parallel to the upper arm of the robot.

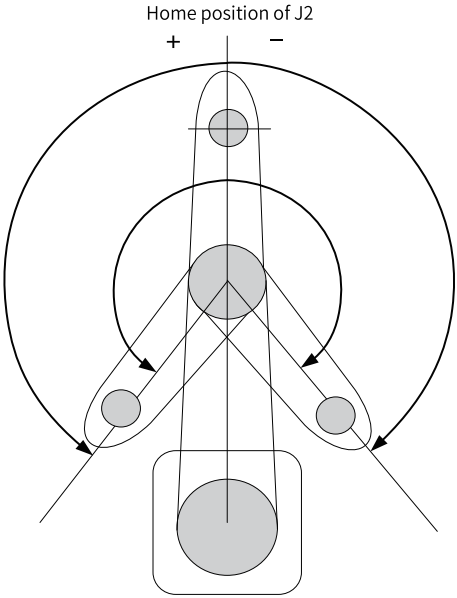

Figure 6-15 Zero point of axis J2

3. The zero point of axis J3 is the upper limit position of axis J3.

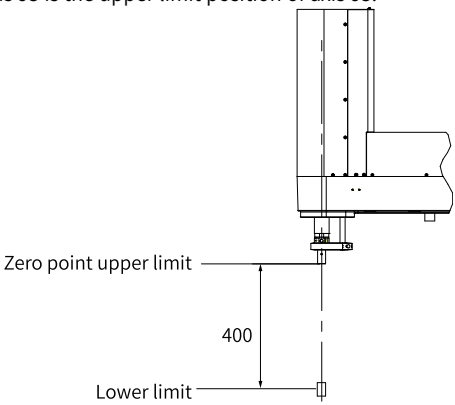

Figure 6-16 Zero point of axis J3 (unit: mm)

The upper limit position of the J3 motion range is shown in the following figure (unit: mm).

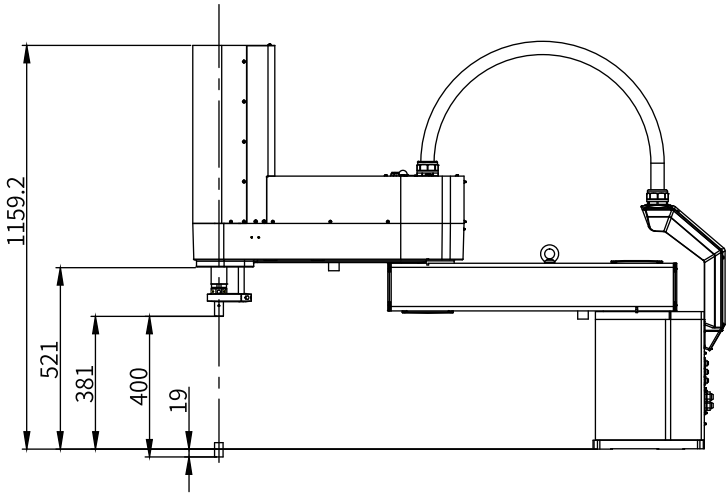

4. The zero point of axis J4: Position where the flat surface on the shaft (or the slots of the upper and lower mechanical stops) faces towards the tip of J2.

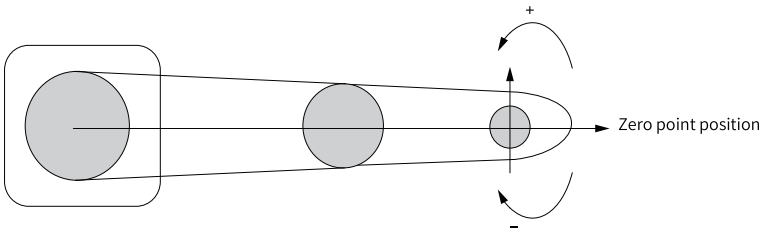

Figure 6-17 Zero point of axis J4

6.4.4 Zero Point Adjustment of J2

Due to the strong correlation between the 4-axis robot's operation point coordinate and the accuracy of J2, it is necessary to complete zero point adjustment of J2 before calculating the robot coordinates. When adjusting the zero point of J2 in *"6.4.2 Procedure of Zero Point Adjustment" on page 53*, refer to the right/left wrist wizard provided by the teach pendant.

Procedure

1. The reference point for zero point adjustment is the center of the ball screw spline shaft. When the center of the end effector deviates from the center of the ball screw spline shaft, it is necessary to remove the end effector and adjust the zero point.

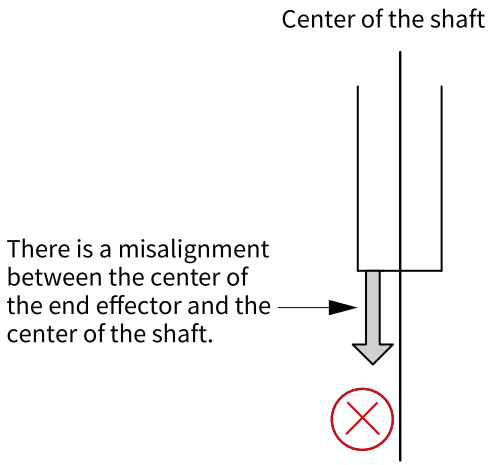

2. Make a zero point adjustment jig on the top side of the shaft to clarify the center of the shaft, as shown in the figure below. Specify a target position that can be easily recognized when the right/left wrist pose is changed, and then mark it with ×.

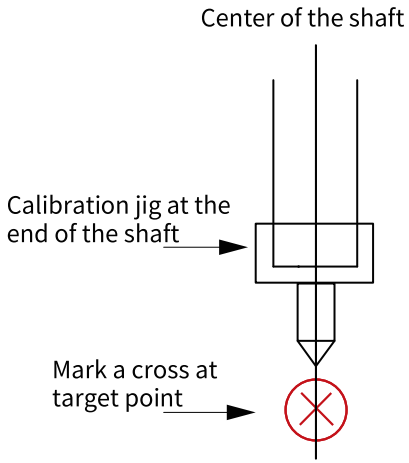

3. Adjust the zero point by using the right wrist or left wrist.
   a. Adjust the robot end to the target point position using the right wrist (or left wrist) pose. On the teach pendant, go to "Set" > "BasePos" > "ZeroPoint", click the "Get Cur" button, and record the degree of J2 in current state as Enc1.
   b. Manually adjust the robot end to the target point position using the left wrist (or right wrist) pose. On the teach pendant, go to "Set" > "BasePos" > "ZeroPoint", click the "Get Cur" button, and record the degree of J2 in current state as Enc2.

c. On the teach pendant, go to "Set" > "BasePos" > "ZeroPoint", click the "Default" button, and get the currently saved zero point info. Calculate (Enc1+Enc2)/2 and fill in the calculation result into the input box of J2, and then click the "Save" button. The zero point adjustment of J2 is complete.

4. After removing the end effector and executing zero point adjustment, install the end effector and move the robot to the teaching point to verify whether there is a positional gap. If there is a positional gap, fine-tune the installation position of the end effector and teach the point again.

7 Certification and Standard Compliance

Third-party certification

Certification mark	Certification	Description	Instruction
	CE	This product complies with Low Voltage Directive (LVD), Machinery Directive (MD), Electromagnetic Compatibility (EMC), and Restriction of Hazardous Substances (RoHS) directives and carries the CE mark.	• EN 60204-1:2018 • EN ISO 10218-1:2011 • EN ISO 12100:2010 • EN 61000-6-2:2019 • EN 61000-6-4:2019 • ISO 13849-1:2023, • EN ISO 13849-1:2015
	SGS-TUV Saar	This product is certified by SGS-TUV Saar for functional safety.	
	cSGSus	This product is certified by SGS North America of Nationally Recognized Test Laboratory (NRTL).	• UL 1740, 4th Ed., Jan. 26, 2018 • NFPA 79 2021 Edition, Dated Oct. 25, 2020 • CAN/CSA Z434-14 (R2019), Reaffirmed 2019
	FCC	This product has passed the Federal Communications Commission (FCC) EMC testing and carries the FCC mark.	-
	KCs	This product is verified by Korea Occupational Safety and Health Agency (KOSHA) in terms of special equipment, labor protection supplies, and guard devices and carries the KCs mark.	-

Note

The preceding certification standards only apply to standard models of products. For specific certification information about customized products, consult Inovance technical personnel.

Declaration of conformity with EU directives

Inovance robots have been certified by the following directives and meet basic requirements of the CE-MD, CE-LVD, CE-EMC, and RoHS directives.

Machinery Directive (MD)	2006/42/EC
Low Voltage Directive (LVD)	2014/35/EU
Electromagnetic Compatibility Directive (EMC)	2014/30/EU
RoHS Directive (ROHS)	2011/65/EU Amended by (EU)2015/863
Applied Harmonized Standards	• EN 60204-1:2018 • EN ISO 10218-1:2011 • EN ISO 12100:2010 • EN 61000-6-2:2019 • EN 61000-6-4:2019 • ISO 13849-1:2023 • EN ISO 13849-1:2015

PS00017915A01

Copyright © Shenzhen Inovance Technology Co., Ltd.

Shenzhen Inovance Technology Co., Ltd.

www.inovance.com

Add.: Inovance Headquarters Tower, High-tech Industrial Park,
Guanlan Street, Longhua New District,
Shenzhen 518000, P.R. China
Tel: (0755) 2979 9595 Fax: (0755) 2961 9897

Suzhou Inovance Technology Co., Ltd.

www.inovance.com

Add.: No. 52, Tian E Dang Road, Wuzhong District, 215104,
Suzhou City, Jiangsu Province, P.R. China
Tel: (0512) 6637 6666 Fax: (0512) 6285 6720